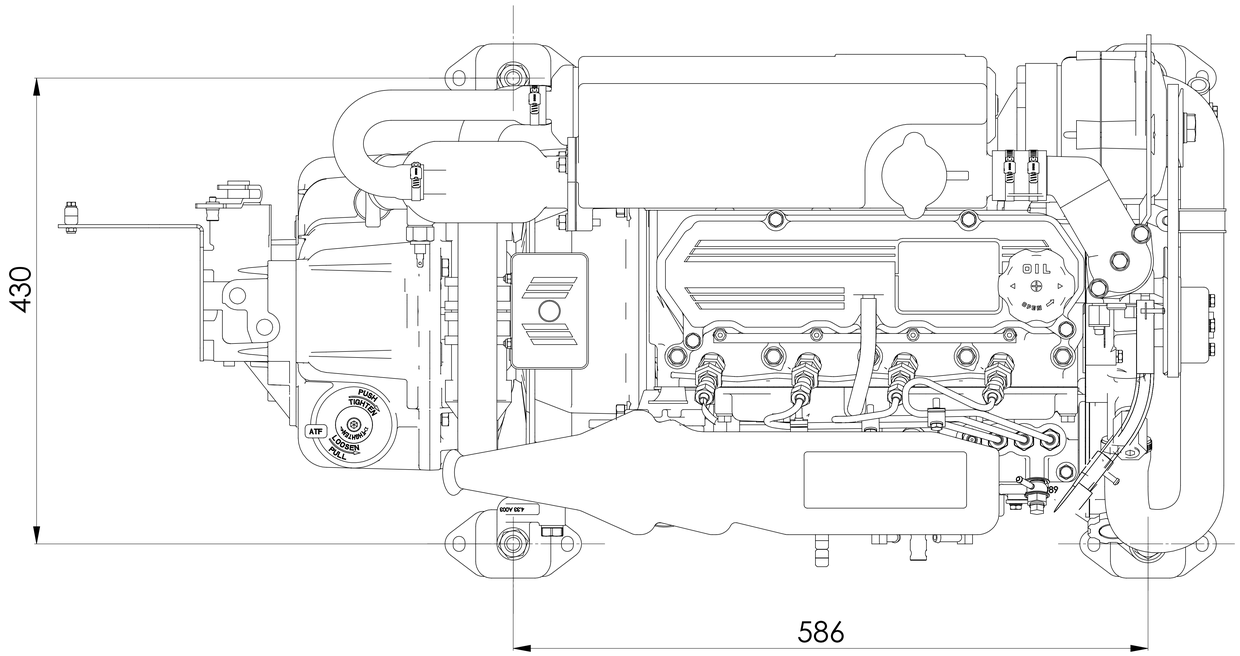

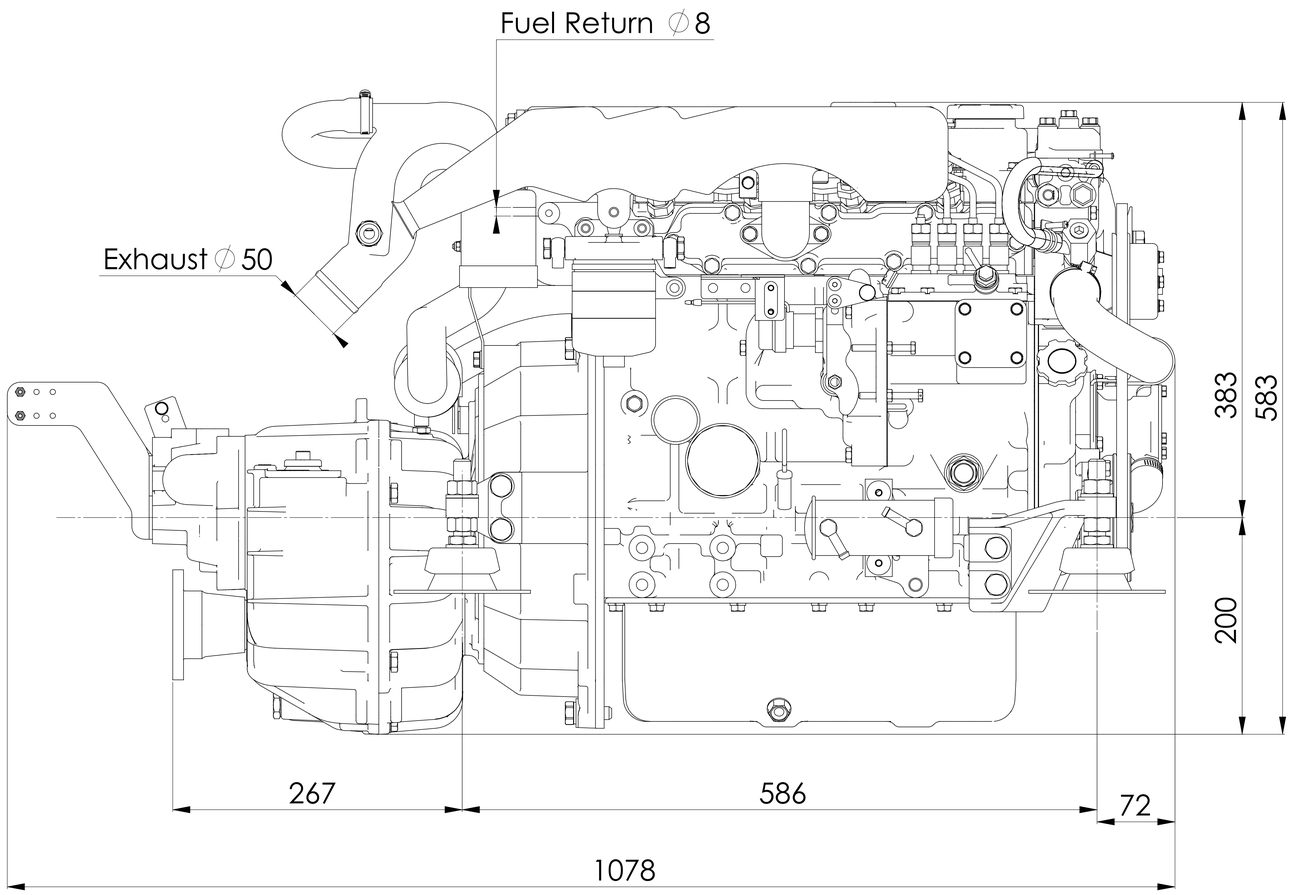

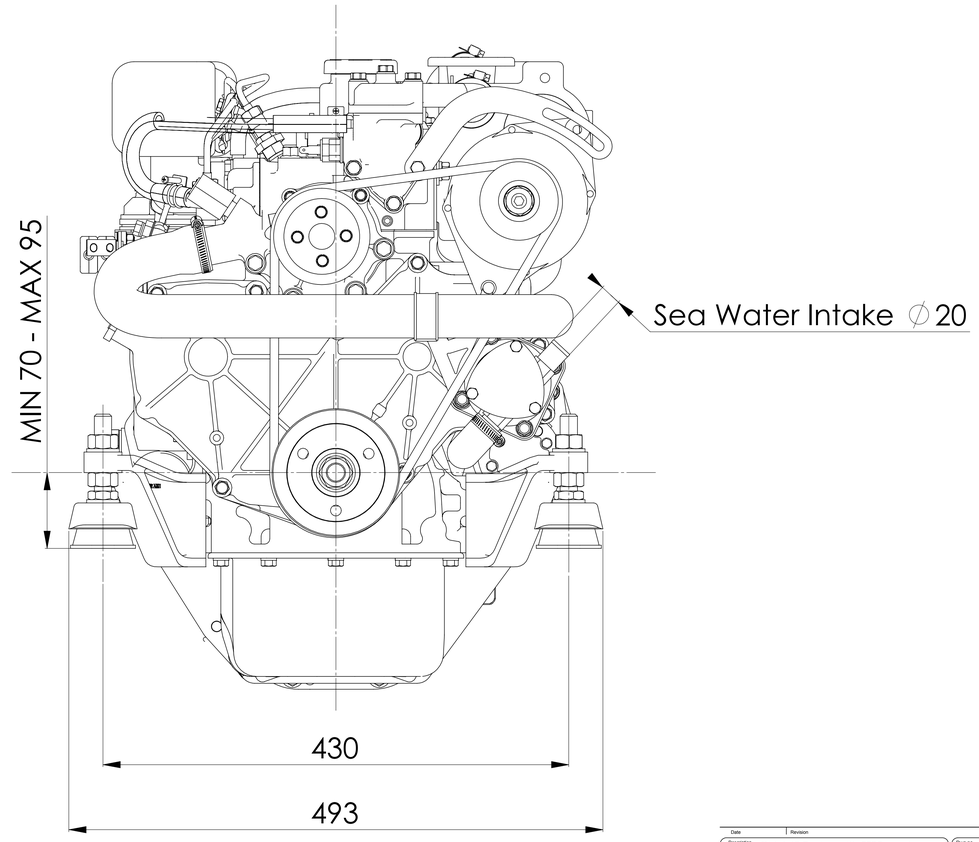

Date	Revision	Initials

Description: CM 4.42 Engine with ZF25 gearbox

Dwg.no.: AA-400-20000

Material:

Weight: 195kg

Scale: 1:2 | Proj: | Date: 16-03-2011

Drawn: JMZ | Checked: | Size: A1L | Dim. in: mm

Product group: Propulsion | Sheet: 1 of: 1

Craftsman Marine

Keerweer 33, 3364 DWHoofddorp, The Netherlands. Tel: +31 (0)88 0062600. Fax: +31 (0)88 0062601 - info@craftsmanmarine.com - www.craftsmanmarine.com

This drawing is the property of Craftsman Marine B.V., Oostkwerk. Copyright reserved acc. law. It is not to be copied (in whole or in part) or otherwise disclosed without the written consent of Craftsman Marine B.V.